Sustainable Supercomputing

Group #50: James Corley, Simon Dudtschak, Alex Perrin
Project Supervisor: Dr. Ryan Grant

Serial Hint Behavior Compared to ACPI Governors

Configuration	Runtime (s)	Power Consumption (J)
Serial Hint	13.34	140.636
Ondemand	13.07	157.697
Performance	12.60	150.000
Powersave	28.24	67.000
Conservative	12.52	160.000

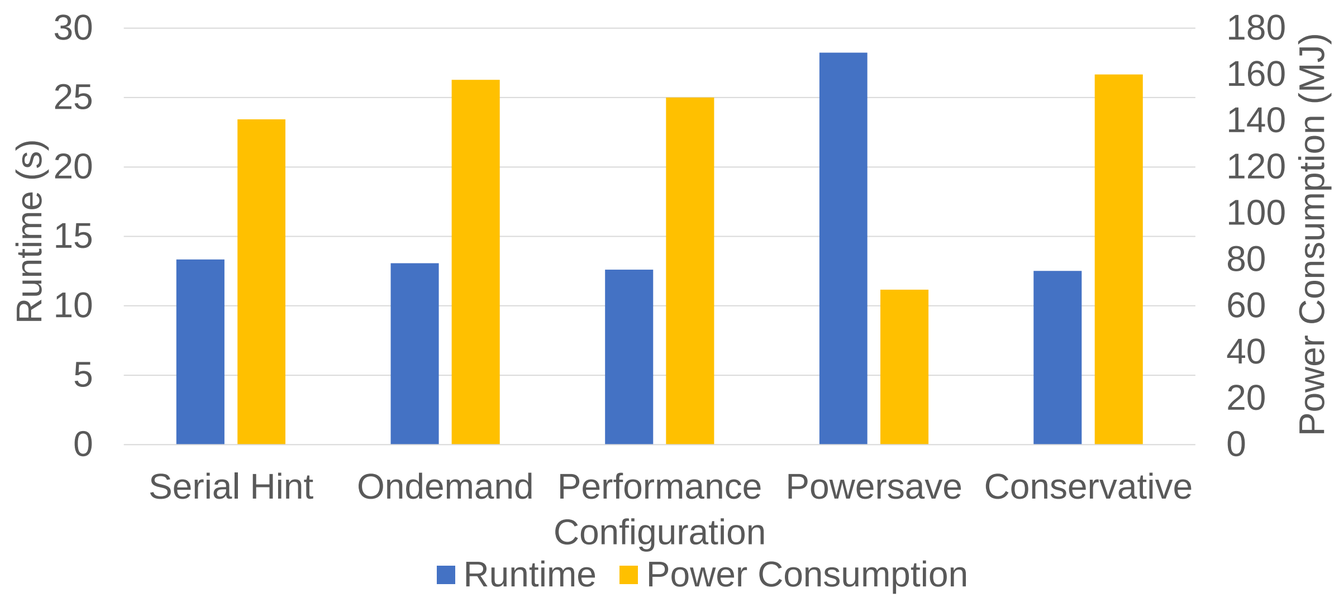

Parallel Hint Behavior Compared to ACPI Governors

Configuration	Runtime (s)	Power Consumption (J)
Parallel Hint	424.33	392.256
Ondemand	433.74	396.698
Performance	422.41	391.936
Powersave	481.32	370.000

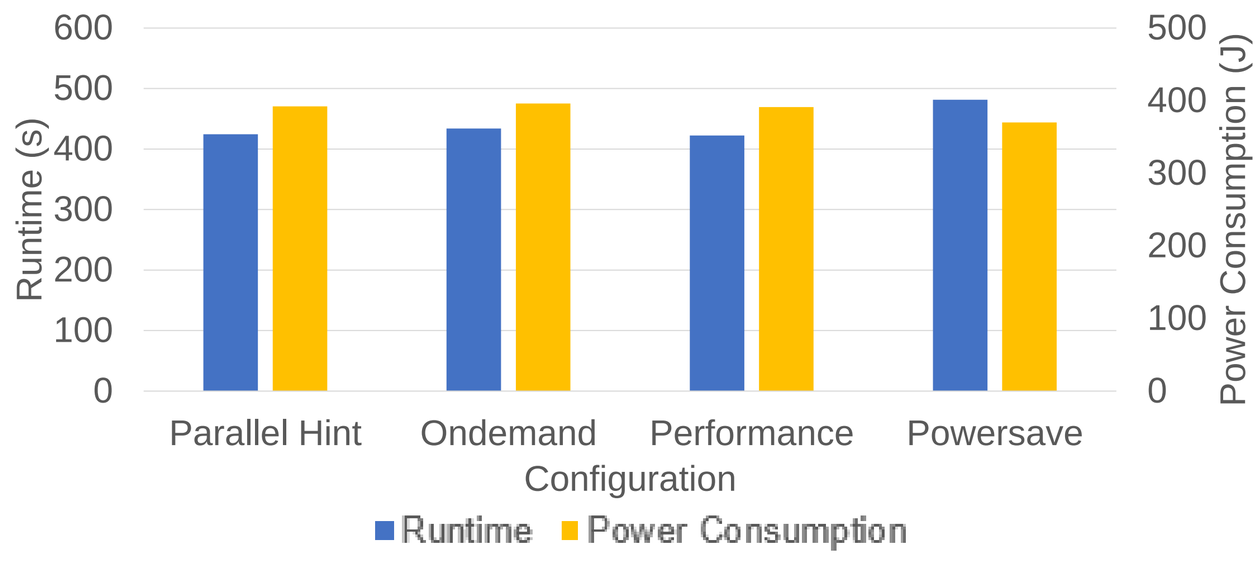

Implementation in a Program

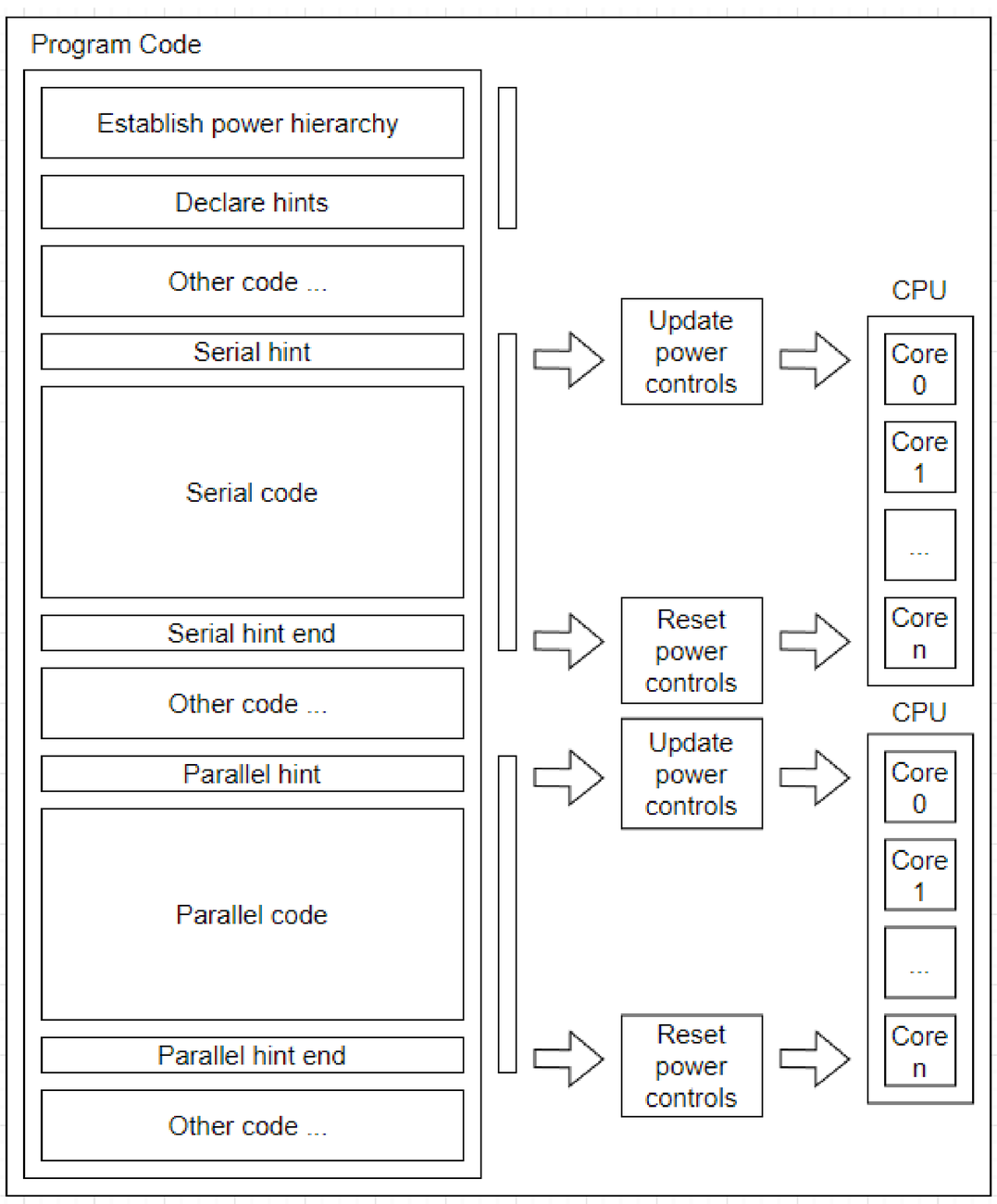

CPU Core Frequency Controlling

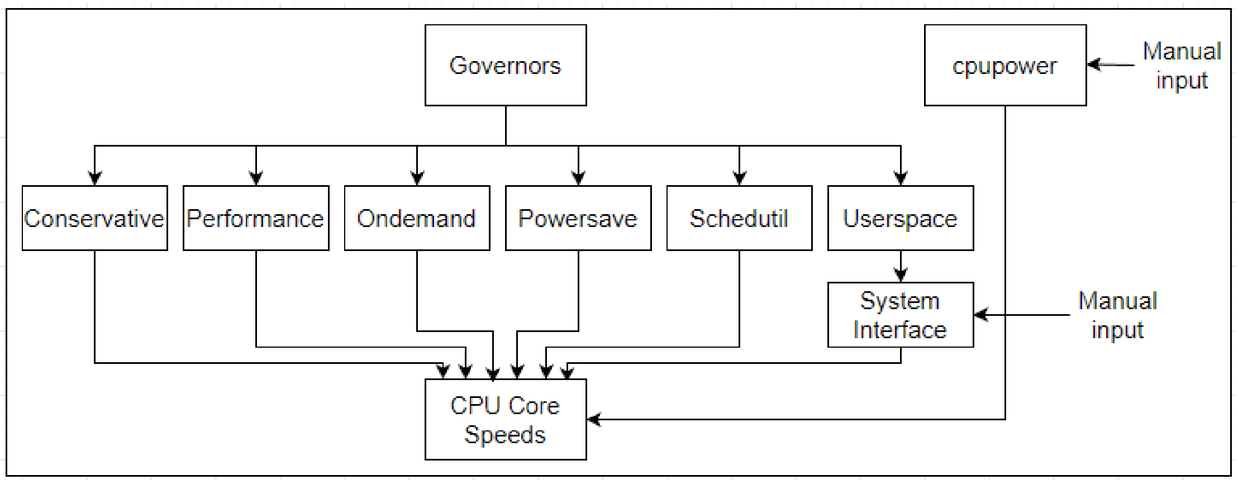

Queen's UNIVERSITY
DEPARTMENT OF
ELECTRICAL AND
COMPUTER ENGINEERING

QUEEN'S UNIVERSITY AT KINGSTON
ECE
ELECTRICAL & COMPUTER ENGINEERING

Queen's UNIVERSITY

Introduction

The goal of this project is to reduce power consumption and improve the runtimes of programs run on scientific compute clusters. This will reduce the large power draw of these clusters and make more efficient use of their resources.

Functionality

The method for optimizing compute resource usage is to implement region hint behavior. Region hints identify certain regions of an application as computationally intensive in different ways, and then dynamically updates the power controls of compute devices to best allocate energy too the hardware that needs it.

The region hint behaviors completed are:
- Serial
- Parallel

Additionally, the following behaviors will be added later:
- Network communication
- Computation
- I/O
- Memory bound

Typically, CPU frequency scaling is done using the following hierarchy:
- Scaling Driver – Controls CPU performance scaling
  - Governors – Protocols to set CPU frequencies

For example, project uses ACPI CPUFreq driver, which has six governors:
- Performance – Set all cores to max frequency
- Powersave – Set all cores to minimum frequency
- Userspace – Set core frequencies manually
- Ondemand – Change core frequency to fit demand
- Conservative – Change core frequency to fit demand
- Schedutil – Scheduler driven frequency setting

However, these governors are purely to test the viability of the solution. To implement hint behavior, manual CPU core frequency setting was used via the cpupower toolset.

The settings found most optimal for both cases was:
- Serial behavior
  - Core 0: Set too maximum frequency
  - Cores 1-n: Set too minimum frequency to allow core 0 to go into turbo state without overheating
- Parallel behavior
  - Core 0-n: Set all cores to maximum frequency

Issues

Compatibility
- CPU manufacturers
- Drivers

Permissions
- Local machines
- External machines

Results

All results are based on benchmarks run on personal computers. This is not the setting in which this software would be deployed, and therefore lacks the tools to see the full benefit. Permissions have now been granted for a node at the Queen's Centre for Advanced Computing, so more data will be collected soon.

Serial case:
- Compared to governors with similar runtimes, the serial hint behavior used **87.9% - 93.7%**, of the power they did
- Likely will be able to improve runtimes on scientific computers due to their support for turbo states

Parallel case:
- Very similar performance to other governors in both runtime and power consumption

Changing cases:
- The overhead to update CPU speeds is very small, at around 0.15 - 0.2s

Summary:
- Moderate power consumption improvements
- No notable runtime improvement measured
- The benefits from the serial case carry over to the parallel case in programs with both serial and parallel computation

Impact

- Even small savings compound rapidly when introduced to large-scale systems
- With an average power saving of 9.2%, a system like Japan's Fugaku could save 25.0 MWh [2] per day, enough to power **960 Ontario homes** [3]***.*** *These values do not account for the power costs of cooling and additional components.*

Recommendations

- More data should be collected on scientific computers to further explore this solution
- The rest of the hint cases should be implemented. Due to the minimal overhead of switching cases, more hints can only prove to improve runtimes and energy efficiency
- This solution is intended to be merged with the Power API, which contains an outline of the region hints, but lacks the behavior implementation

References

[1] R. E. Grant et al. "High Performance Computing - Power Application Programming Interface Specification Version 1.0" Sandia National Laboratories, Albuquerque, United States. Nov 2019. Available: https://pwrapi.github.io/files/powerapi_v10.pdf. [Accessed Oct 19, 2022].

[2] *Operation Status of Fugaku*. [Online]. Available: https://status.fugaku.r-ccs.riken.jp/d/fugaku/0-operation-status-of-fugaku?orgId=1. [Accessed: 13-Mar-2023].

[3] "Residential Electricity and Natural Gas Plans," *EnergyRates.ca*, 01-Sep-2020. [Online]. Available: https://energyrates.ca/residential-electricity-natural-gas/. [Accessed: 13-Mar-2023].